SEQUENCE® PumPaq

PumPaq 9200PWR69-PQ

The PumPaq by Sequence® - a multi-pump package for applications between 5,000 and 15,000 GPH. An engineered system solution that reduces installation cost, the PumPaq is a high quality manifold for parallel pump configurations. When higher flow rates are required, two low-speed pumps operating in parallel are often more efficient than one high-speed pump. Operational comparisons can be found on the Pump Selector at www.sequencepumps.com. In addition, the redundancy of double-pump installations provide biological security for filters if one pump were to fail. The PumPaq is offered in configurations designed to meet a wide range of requirements:

Stand Alone - Units are purchased separate from pumps and assembled onsite
Complete - Shipped with high and low-speed pumps mounted
Automated - Custom built to a specified performance with pumps, variable frequency drives, and timers

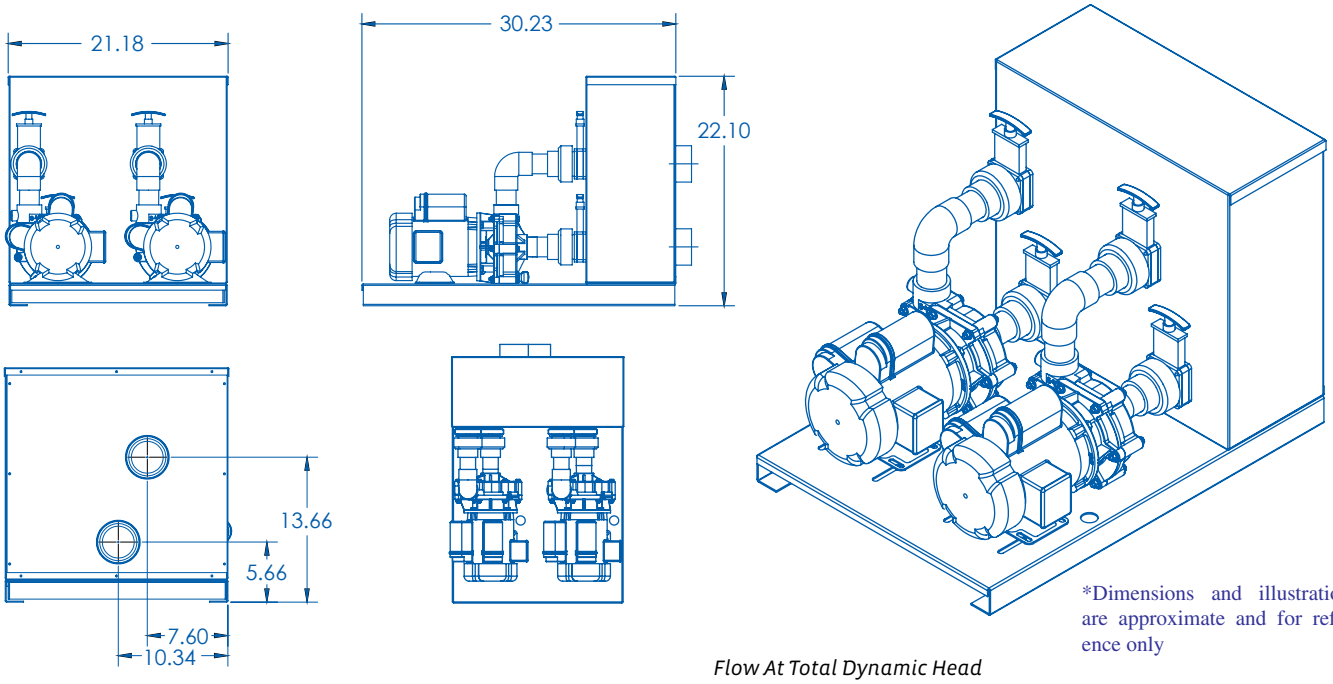

*Dimensions and illustrations are approximate and for reference only

Flow At Total Dynamic Head

Model	Max Flow GPH	Max Head Feet	Max Power Watts	Max Current Amps	Flow	10'	20'	30'	40'	50'	Voltage	Motor Enclosure
9200PWR69-PQ	15000	72	3380	N/A	GPM	232	213	191	167	135	230	TEFC
					GPH	13920	12780	11460	10020	8100		

Sustainable, Efficient

© 2009 SEQUENCE PUMPS *A DIVISION OF MDM INC.*

3+ plus Year Warranty
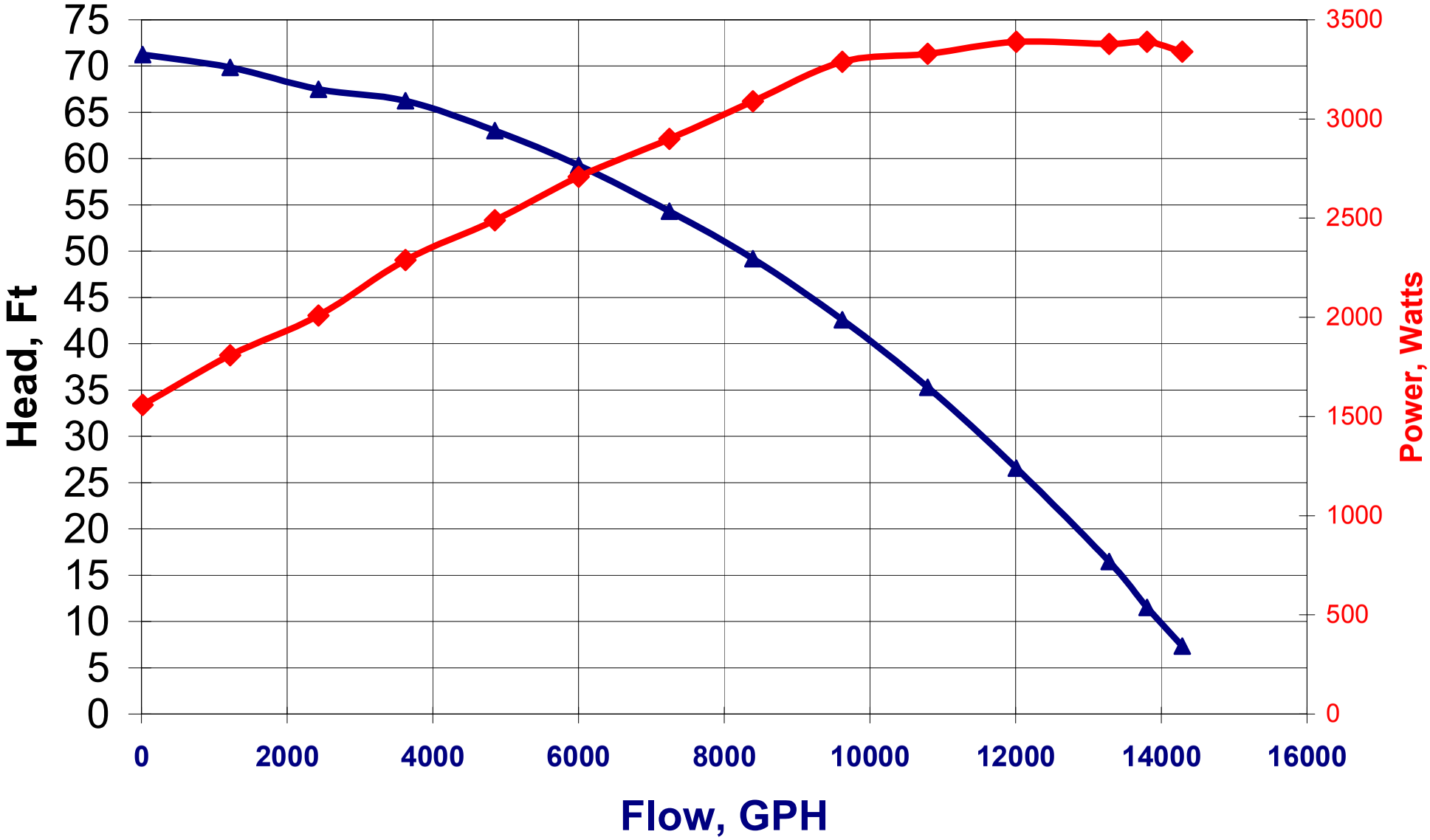
SEQUENCE PumPaq 9200PWR69-PQ