SEQUENCE® Sun Pump 1000-24 V

Sun Pump Model *24VDC7-1000*

The Sun Pump 1000 series are supplied with 4-pole/24 Volt motors. There are four different impeller options to choose from, ranging from max flow rates up to 5800 GPH, to max shut-off head of 27 feet. ***Please Note: Solar panel and battery system not included.***

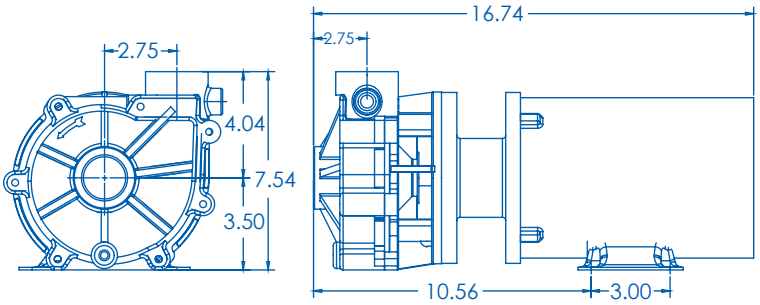

*Dimensions and illustrations are approximate and for reference only

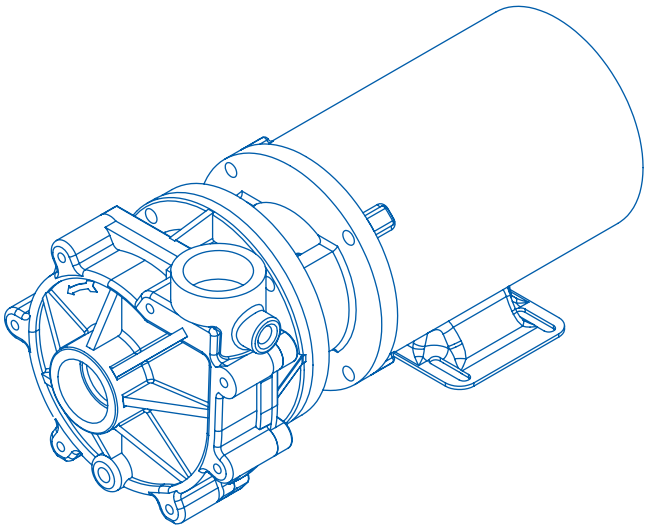

Model	Max Flow GPH	Max Head Feet	Max Power Watts	Max Current Amps	Flow	4'	8'	12'	16'	20'	Voltage	Motor Enclosure
					Flow At Total Dynamic Head							
24VDC7-1000	5800	27	256	10.3	GPM	85	70	54	37	23	24 VDC	TENV
					GPH	5100	4200	3240	2220	1380		

Sustainable, Efficient

© 2009 SEQUENCE PUMPS *A DIVISION OF MDM INC.*

1 Year Warranty
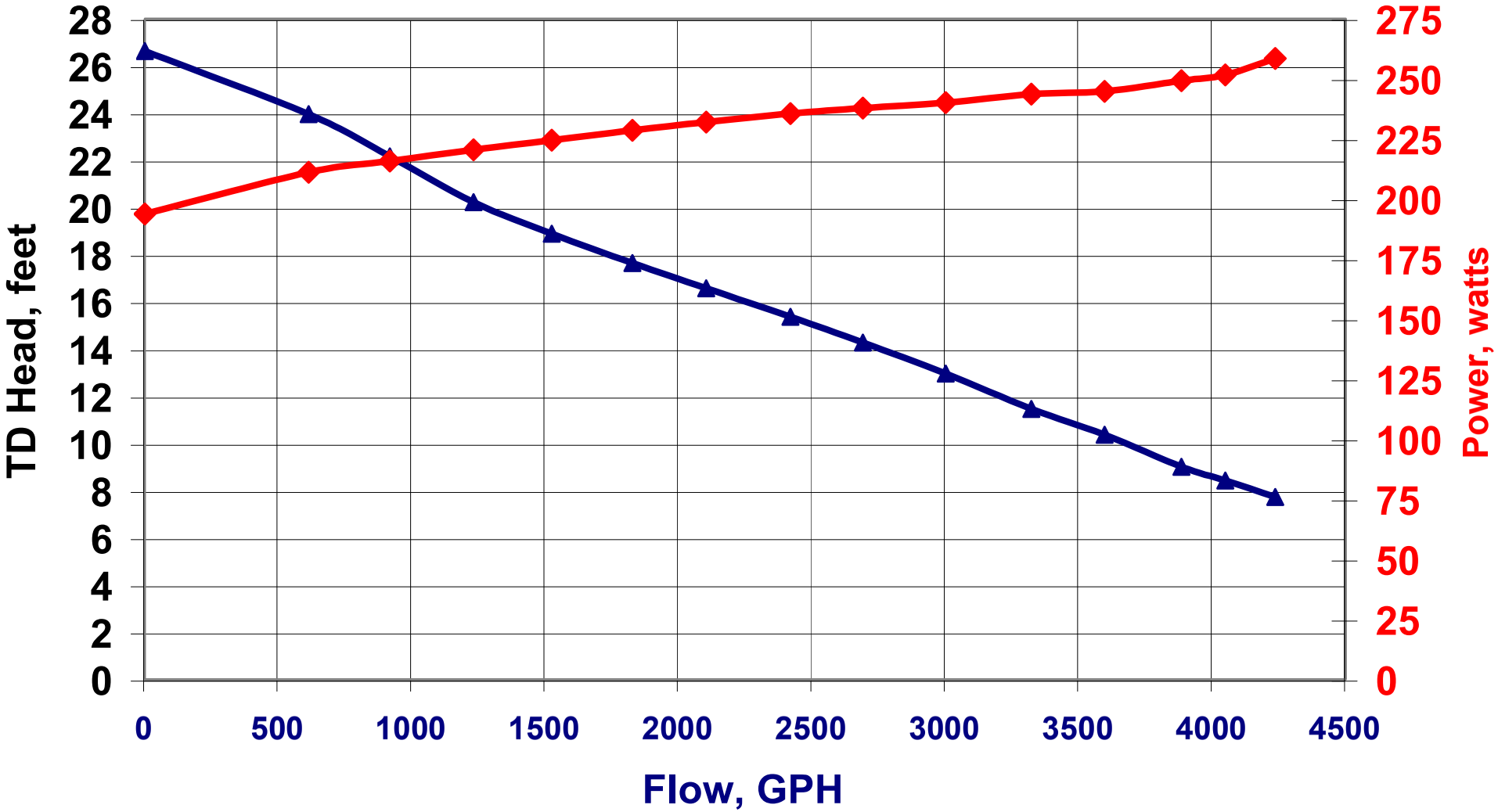
SEQUENCE 24VDC7-1000 (Low-Speed)